Overflow unit

OLC

Description

OLC is a circular overflow unit for installation directly into a wall. OLC consists of two sound-attenuating baffles, which are mounted on both sides of the wall.

- Discrete design
- Sound-attenuating baffles

Maintenance

The sound attenuation baffles on both sides of the wall can be removed to enable cleaning of internal parts. The visible parts of the unit can be wiped with a damp cloth.

Order code

Product	**OLC**	**aaa**
Type		
OLC		
Size		
100, 125, 160 mm		

Example: OLC - 125

Dimensions

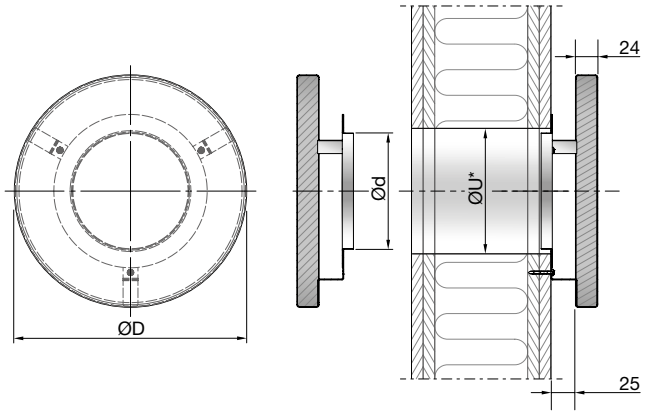

OLC Size (Ød)	ØD mm	*ØU	**OLC kg	OLCZ kg
100	200	108-110	0.80	0.15
125	250	133-135	1.00	0.19
160	300	168-170	1.20	0.24

*ØU = Cutout dimension in wall = Ød + 10 mm
** The given weight is valid for two sound-attenuation baffles.

Quick selection

OLC Size	Δp_t = 10 Pa		Δp_t = 15 Pa		Δp_t = 20 Pa		$*D_{n,e,w}$
Ød	l/s	m^3/h	l/s	m^3/h	l/s	m^3/h	dB
100	19	68	24	86	27	97	49
125	28	101	34	122	39	140	47
160	40	144	49	176	56	202	44

* Values valid for cavity wall with 95 mm insulation.

Materials and finish

Installation bracket:	Galvanised steel
Front plate:	Galvanised steel
Standard finish:	Powder-coated
Standard colour:	RAL 9010 or 9003, Gloss 30

The OLC is available in other colours. Please contact Lindab's sales department for further information.

Overflow unit

OLC

Accessories

OLCZ - Perforated wall sleeve

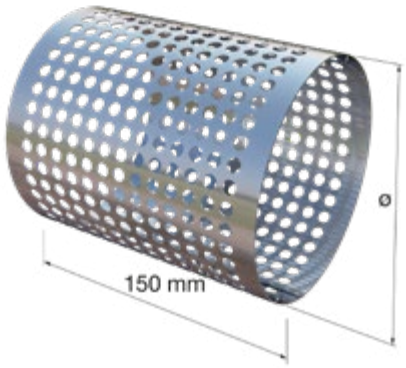

Order code

Product	**OLCZ**	**aaa**
Type		
OLCZ		
Size		
Ø100, 125, 160 mm		

Example: OLCZ - 160

OLC installed in wall

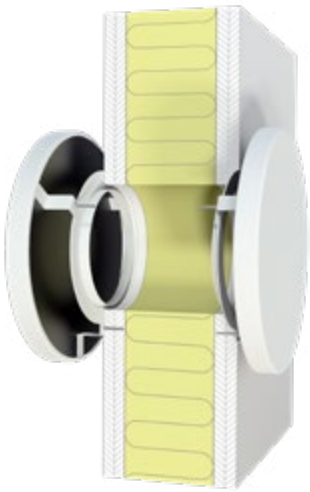

OLC with OLCZ installed in wall

OLCZ optional accessory.

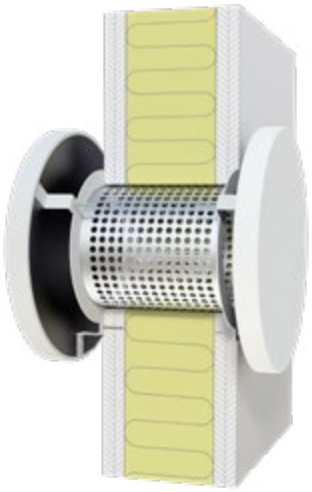

For further information, see OLC installation instruction.

Lindab reserves the right to make changes without prior notice
2026-09-03

Overflow unit

OLC

Technical data

Capacity

Air flow rate q_v [l/s] and [m³/h], total pressure loss Δp_t [Pa] and sound power level L_{WA} [dB(A)] are specified for a OLC unit on both sides of the wall.

Dimensioning diagram

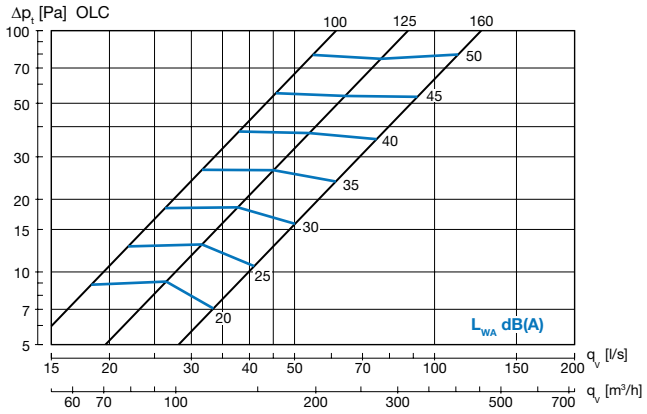

Element-normalised reduction figure $D_{n,e}$

Weighted value ($D_{n,e,w}$) evaluated according to ISO 717-1

Cavity wall with 95 mm insulation

Size	Centre frequency Hz					
mm	125	250	500	1K	2K	*$D_{n,e,w}$
100	32	46	46	48	54	49
125	34	43	43	46	51	47
160	34	40	40	44	50	44

Cavity wall with 70 mm insulation

Size	Centre frequency Hz					
mm	125	250	500	1K	2K	*$D_{n,e,w}$
100	30	40	38	42	50	43
125	30	37	37	42	49	43
160	30	34	34	40	50	41

Solid wall without insulation

Size	Centre frequency Hz					
mm	125	250	500	1K	2K	*$D_{n,e,w}$
100	24	24	23	32	40	31
125	23	24	23	33	40	31
160	24	24	23	32	39	30

Overflow unit

OLC

Technical data

Sample calculation

When dimensioning an overflow diffuser, calculate the decrease in the wall's noise-reducing properties.

For these calculations, the area of the wall and sound reduction figure R must be known.

This is adjusted in relation to the unit's $D_{n,e}$ value. $D_{n,e}$ is the unit's R value given at a transmission area of 10 m², as specified in ISO 140-10.

The $D_{n,e}$ value can be converted into the R value for other transmission areas using the table below.

Area m²	10	2	1
Correction dB	0	-7	-10

The diagram below indicates the decrease of the sound reduction index of the wall, for a given octave band value ($D_{n,e}$) or weighted value ($D_{n,e,w}$).

As a rough estimate the calculation can be performed directly using the wall´s Rw value and the weighted elementnormalized level difference $D_{n,e,w}$ of the unit.

Example:

(See diagram below) :

R_w (wall):	50 dB	
$D_{n,e,w}$ (diffuser):	44 dB	R_w - $D_{n,e,w}$ = 6 dB
Area of wall:	20 m²	
Number of Units:	1	20 m²/1 = 20 m²

Indicated reduction of R_w (wall):	5 dB
R_w value for wall with unit:	~50-5 = 45 dB

The calculation can also be performed using the following formula:

$$R_{res} = 10 \cdot \text{Log} \frac{S_{wall}}{(10m^2 \cdot 10^{-0,1 \cdot D_{n,e}}) + (S_{wall} \cdot 10^{-0,1 \cdot R_{wall}})}$$

where:

- R_{res} is the resulting reduction figure for wall and diffuser.
- S is wall area.
- $D_{n,e}$ is the unit's $D_{n,e}$ value.
- R_{wall} is the wall's R value without unit.

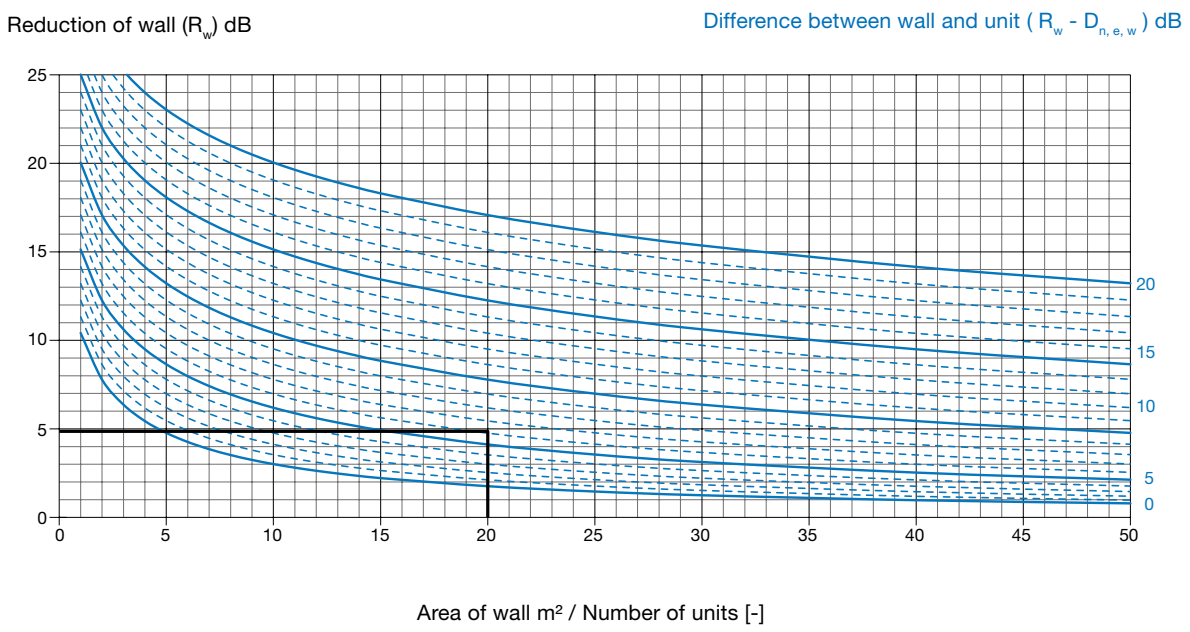

Lindab reserves the right to make changes without prior notice
2026-09-03